# SUMMIT BODYWORKS

A DIVISION OF SUMMIT TRUCK BODIES LLC

6691 COLORADO BOULEVARD
COMMERCE CITY, COLORADO 80022
PHONE 866-514-8184
LOCAL 303-301-7550
FAX 303-288-2847

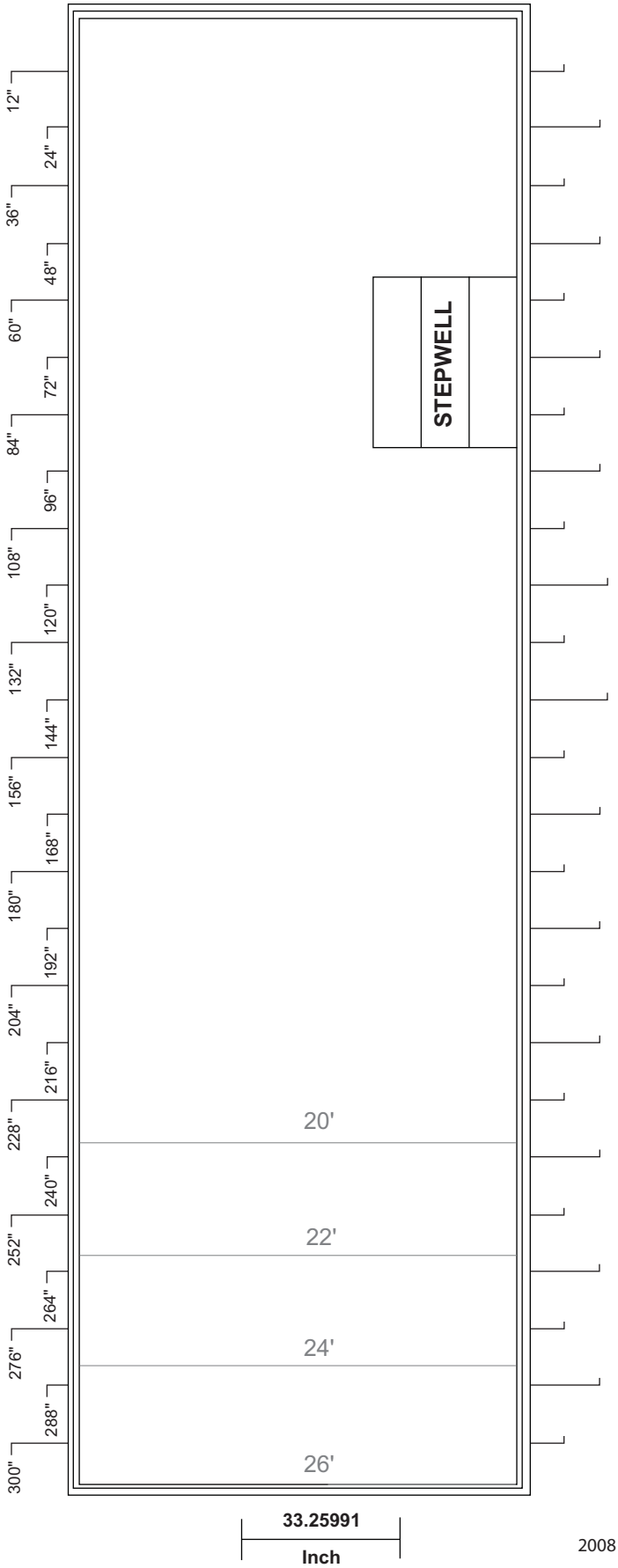


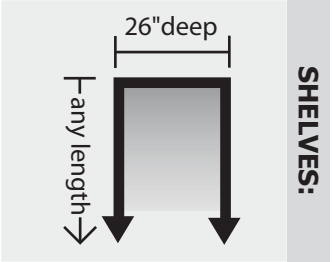

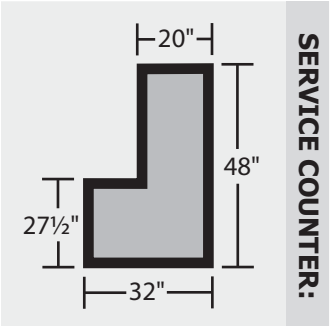


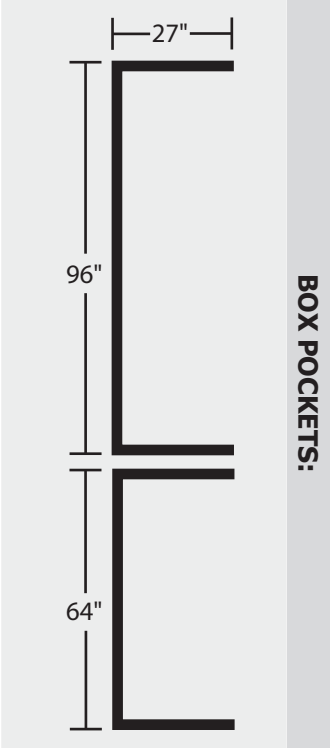


## OPTIONS LIST

- ☐ _____
- ☐ _____
- ☐ _____
- ☐ _____
- ☐ _____
- ☐ _____
- ☐ _____
- ☐ _____
- ☐ _____
- ☐ _____
- ☐ _____
- ☐ _____
- ☐ _____
- ☐ _____
- ☐ _____
- ☐ _____
- ☐ _____
- ☐ _____
- ☐ _____
- ☐ _____
- ☐ _____
- ☐ _____
- ☐ _____
- ☐ _____
- ☐ _____
- ☐ _____

2008 Copyright Summit Bodyworks